Fiberglass Cornice by: Royal Corinthian
Profile: CR255x8
1'-4" H x 6 7/16" P x 96" L

Available in:
Paint Grade (white gel coat finish)
Pre-Finished (colored gel coat)
Stone Finish (textured or smooth)
Granite Finish (smooth granite look)

Manufactured by: Royal Corinthian
T. 888-265-8661
F. 888-344-2937
www.royalcorinthian.com
royalcor@royalcorinthian.com

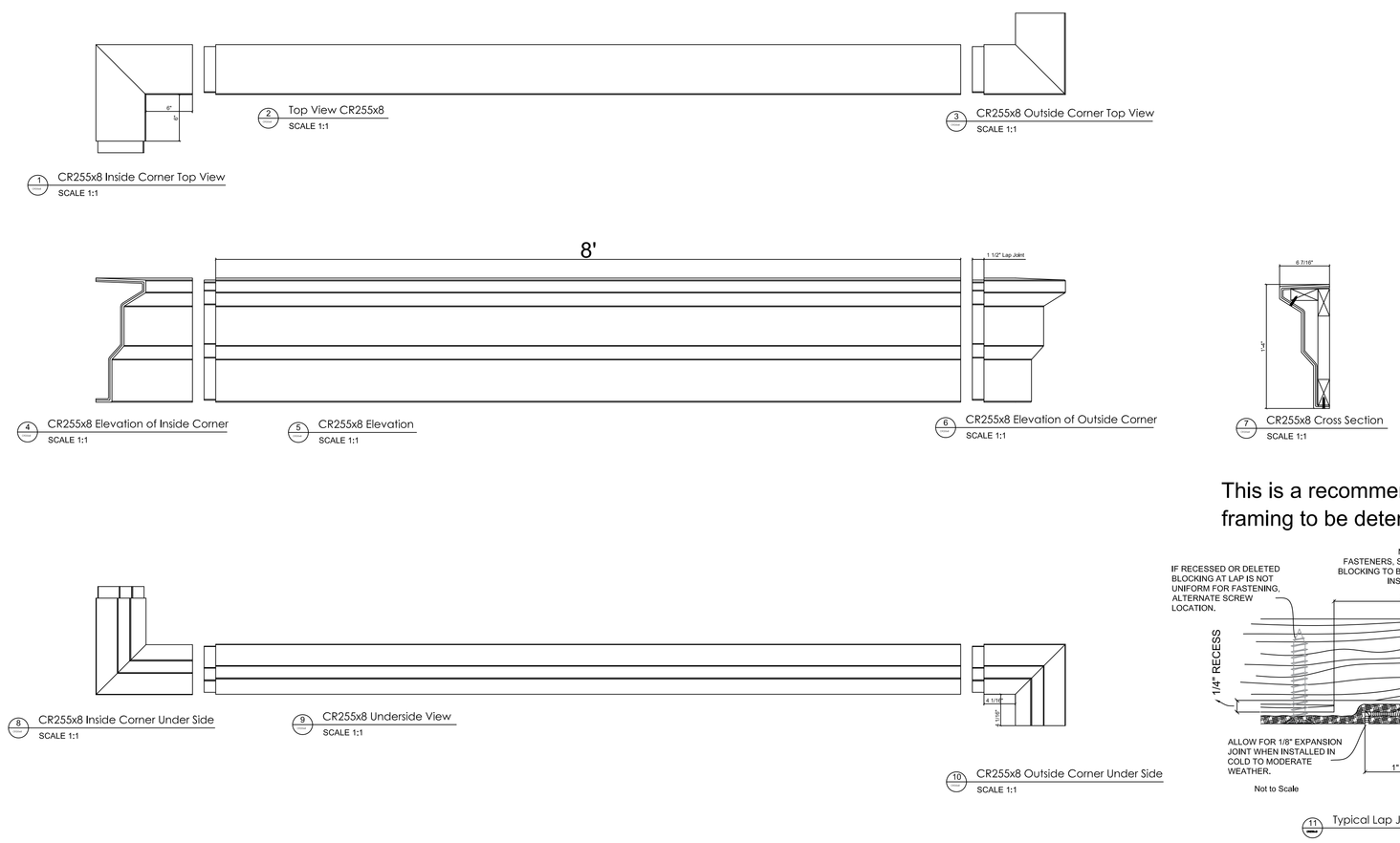

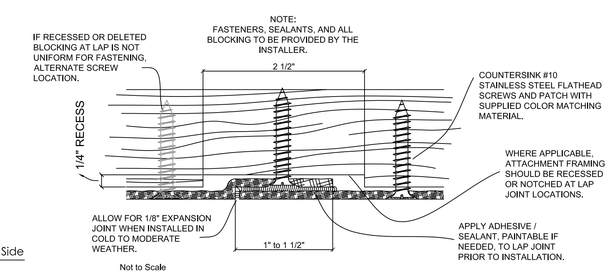
This is a recommendation. Actual framing to be determined by Engineer.